ARREX

LIGHTING ARRESTERS FOR TELECOMMUNICATION LINE

MODEL
SF-100

MODEL

- SF-100

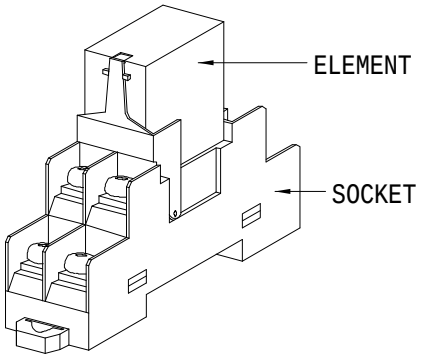

COMMOM SPECIFICATIONS

Construction : plug-in
Housing material : plastic (black)

INSTALLATION

Operating temperature : -10 to +60℃
Operating humidity : 90%RH(non-condensing)
Mounting : WALL or DIN rail
Size : W19.5 X H85.5 X D54
Weight : 50g

The Vector Lightning Arrester Model SF-100 is designed specifically for telecommunication equipment.
It absorbs lightning arrester entering through twistedpair cables linking each Modem unit to protect it.

SPECIFICATIONS

PARTICULAR		DATA
Model		SF-100
Discharge Voltage	btwn lines	≧ 270VDC
	btwn lines & ground	≦ 500V
Maximum Leakage Current	btwn lines	≦ 1μA (at 160VDC)
	btwn lines & ground	≦ 1μA (at 160VDC)
Max. surge Voltage	btwn lines	≦ 650V
Discharge Current Capacity		1000A(8x20μs)
Response Time	btwn lines	<0.1μsec
	btwn lines & ground	<0.1μsec
Internal Series Resistance		Approx. 0.1Ω (including return)
Max. Load Current		500mA
Electrostatic capacity	btwn lines	<3pF
	btwn lines & ground	<3pF

DESCRIPTIONS

- DIN rail or wall mount
- Compact and light-weight
- Plug-in structure
- No interruption of transmission when unplugging the arrester element
- Lightning surges are absorbed to a large extent. The SF-100 has high responsiveness

SCHEMATIC CIRCUITRY

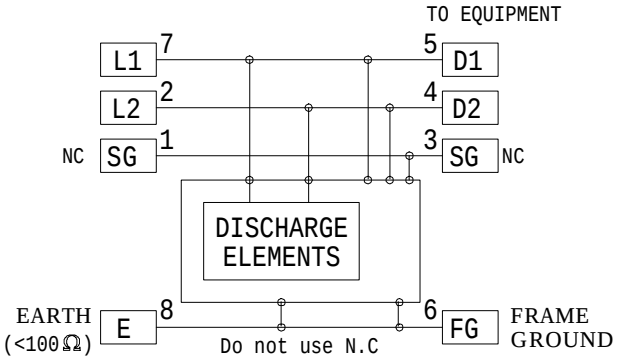

SOCKET

Model : P2RF-08-S
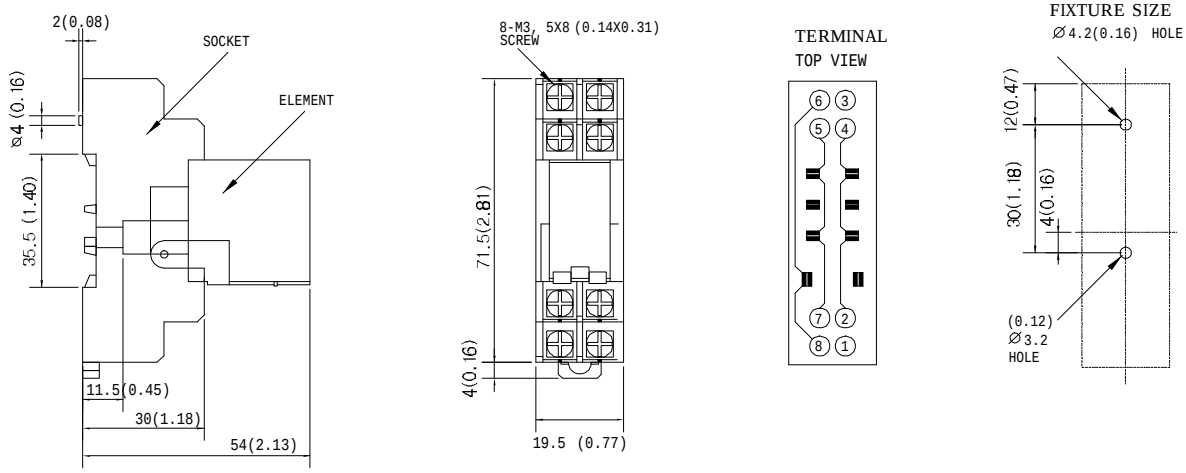
DIMENSIONS [Scale : mm(inch)]