ARREX

LIGHTING ARRESTERS FOR 3-WIRE SENSORS

MODEL
SK-312

TYPICAL APPLICATIONS

- Three-Wire Sensors or transmitter for instance Potentiometer/Resistance Temperature

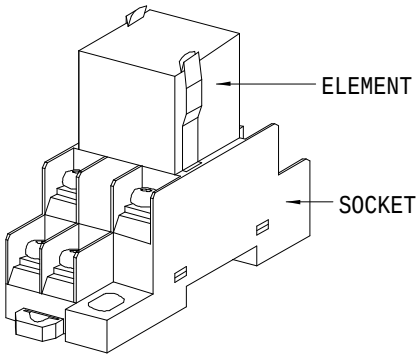

COMMOM SPECIFICATIONS

Construction : plug-in
Housing material : plastic (black)

INSTALLATION

Operating temperature : -10 to +60℃
Operating humidity : 90%RH(non-condensing)
Mounting : WALL or DIN rail
Size : W28.5 X H71 X D78.5
Weight : 72g

The Vector Lightning Arrester Model SK-312 is designed specifically for 3-wire sensors transmitter. Lightning surges damage that enters into wiring between the potentiometter/RTD and transmitter will be absorbed by the SK-312, thus will protect the potentiometer and transmitter.

SPECIFICATIONS

PARTICULAR		DATA
Model		SK-312
Discharge Voltage	btwn L-SG	≧ 16V
Maximum Leakage Current	btwn L-SG	≦ 5μA (at 16VDC)
	btwn L or SG-E	≦ 1mA (at 135VDC)
Max. surge Voltage	btwn L-SG	≦ 34V(8x20μs)
	btwn L or SG-E	≦ 250V (8x20μs)
Discharge Current Capacity		3500A(8x20μs)
Response Time	btwn L-SG	<0.001nsec
	btwn L or SG-E	<1μsec
Internal Series Resistance		Approx. 0.1Ω (including return)
Max. Load Current		100mA

DESCRIPTIONS

- DIN rail or wall mount
- Compact and light-weight
- Plug-in structure
- No interruption of transmission when unplugging the arrester element
- Lightning surges are absorbed to a large extent. The SK-312 has high responsiveness

SCHEMATIC CIRCUITRY

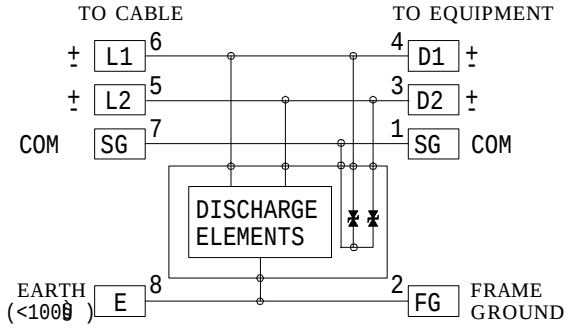

SOCKET

Model : PTF08A-B
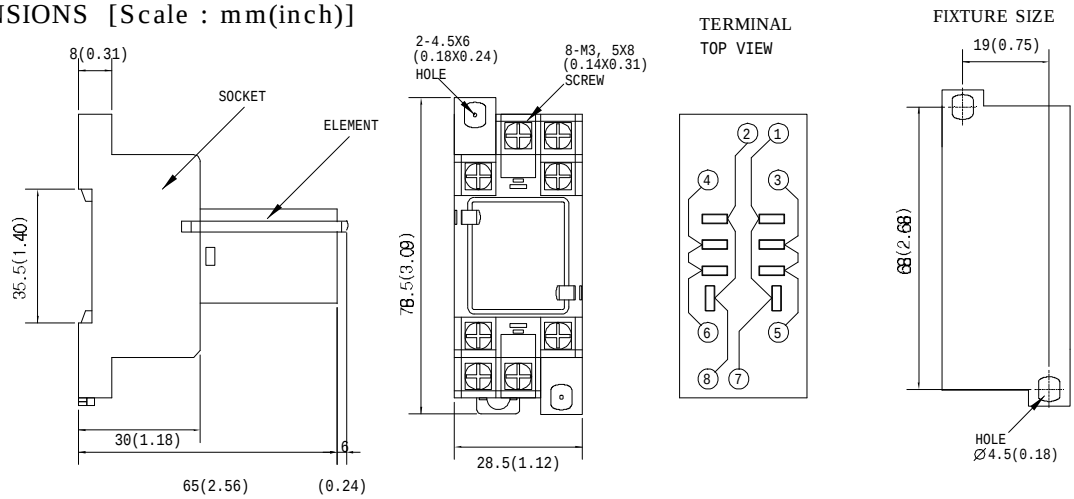
DIMENSIONS [Scale : mm(inch)]