ARREX

LIGHTING ARRESTERS 10000A CLASS FOR 3-WIRE AC POWER SUPPLIES

MODEL
SP-332

MODEL

- SP-332 (at 3-PHASE 3-WIRE 200VAC)
  (at 1-PHASE 3-WIRE 100V/200VAC)

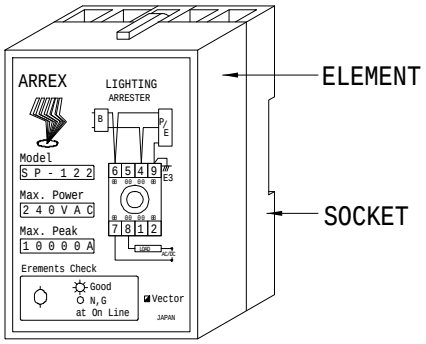

COMMOM SPECIFICATIONS

Construction : plug-in
Housing material : plastic (black)

INSTALLATION

Operating temperature : -10 to +60
Operating humidity : 90%RH(non-condensing)
Mounting : WALL or DIN rail
Size : W50 X H80 X D50
Weight : 230g

The Vector Lightning Arrester Model SP-332 is designed specifically for 3-wire 100V/200VAC power supplies. A temperature fuse is provided to protect the power source in case of breakdown of the discharge element itself.

SPECIFICATIONS

PARTICULAR		DATA
Model		SP-332
Discharge Voltage	btwn lines	423V
	btwn lines & ground	423V
Max. surge Voltage (8x20)	btwn lines	775V
	btwn lines & ground	775V
Discharge Current Capacity		10000A(8x20)
Maximum Leakage Current	btwn lines	1mA (at 423V)
	btwn lines & ground	1mA (at 423V)
Response Time		0.1 sec
Max. Load Current		30A
Alarm output A Serial Load Capacity		200V 1A AC/DC When notify time is open

DESCRIPTIONS

- DIN rail or wall mount
- Compact and light-weight
- Plug-in structure
- Element maintenance can be done without cutting power
- Lightning surges are absorbed to a large extent and response time is very fast.
- Short-circuits are easily checked and alarm output can be monitored.

SCHEMATIC CIRCUITRY

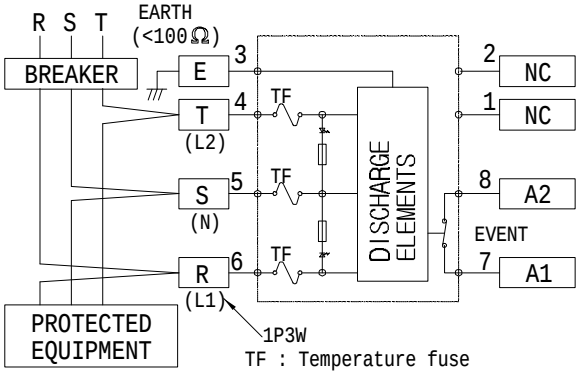

SOCKET

Model : 8PFA
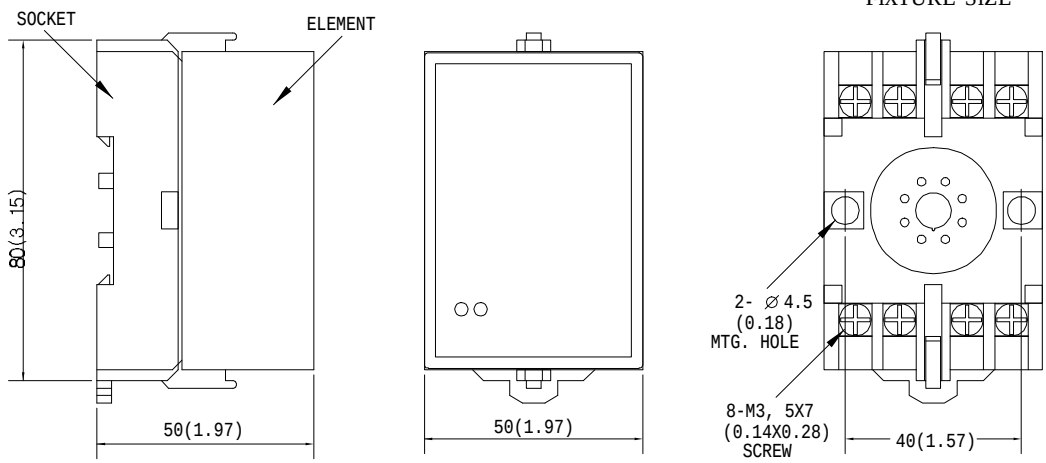
DIMENSIONS [Scale : mm(inch)]